LED Nixie Tube Driver and Keyboard Control Chip CH450

Datasheet
Version: 2
http://wch.cn

1. Overview

CH450 is an LED nixie tube display driver and keyboard scan control chip. CH450 has a built-in clock oscillation circuit, which can dynamically drive 6-bit LED nixie tubes or 48 LEDs and can also scan the keyboard with 48 keys; CH450 exchanges data with a MCU through a two-wire serial interface and provides a power on reset signal for MCU.

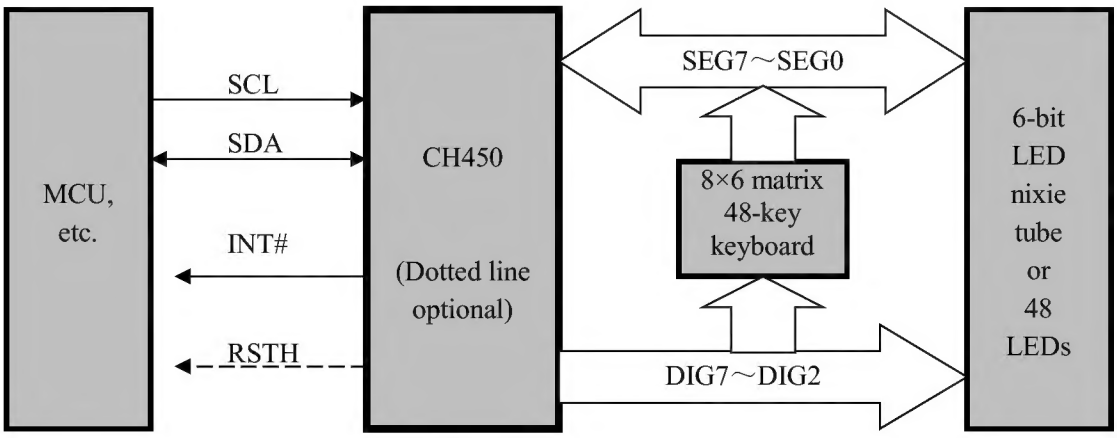

2. Features

- Built-in display current driving stage, segment current not less than 15mA, word current not less than 80mA.
- Dynamic display scanning control, direct drive of 6-bit LED nixie tubes or 48 LEDs.
- Built-in 48-key keyboard controller, based on 8×6 matrix keyboard scanning.
- Built-in pull-down resistor of key status input, built-in jitter suppression circuit.
- Provide active low keyboard interrupt, key release flag bit for query key to be pressed down and released.
- High speed two-wire serial interface, clock speed from 0 to 2MHz, compatible with 2-line I^2C bus, saving pins.
- Built-in clock oscillator circuit, no need to provide external clock or external oscillator components, more anti-interference.
- Built-in power on reset, providing active high reset output for MCU at high level.
- Support low-power sleep, save power, can be waked up by key or command operation.
- Provide DIP20 and SOP20 lead-free packages, compatible with RoHS, functions and pins compatible with CH455 chip.

3. Package

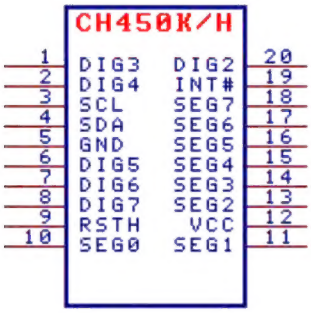

Package	Width of Plastic		Pitch of Pin		Instruction of Package	Ordering Information
SOP20	7.62mm	300mil	1.27mm	50mil	Standard 20-pin wide patch	CH450H
DIP20	7.62mm	300mil	2.54mm	100mil	Standard 20-pin dual in-line	CH450K

4. Pins

Pin No.	Pin Name	Pin Type	Pin Description
12	VCC	Power	Positive power, continuous current not less than 100mA
5	GND	Power	Common ground, continuous current not less than 100mA
10, 11, 13, 14, 15, 16, 17, 18	SEG0 ～SEG7	Three-state output and input	Segment drive of LED nixie tube, active at high level Keyboard scan input, active at high level, built-in pull-down resistor
20, 1, 2, 6, 7, 8	DIG2 ～DIG7	Output	Digit drive of LED nixie tube, active at low level Keyboard scan output, active at high level
4	SDA	Built-in pull-up Open-drain output and input	Two-wire serial interface data input and output
3	SCL	Input	Data clock of two-wire serial interface, built-in pull-up resistor
9	RSTH	Output	Power-on rest output, active at high level
19	INT#	Built-in pull-up Open-drain output	Keyboard interrupt output, active at low level

5. Function Specification

5.1. General Specification

For data in this manual, those ending with B are binary numbers and those ending with H are hexadecimal numbers. Otherwise, they are decimal numbers. The bit marked as x indicates that the bit can be any value.

MCU (also DSP, microprocessor and other controllers) controls CH450 through the two-wire serial

interface. CH450 LED nixie tube display driver and the keyboard scanning control are independent mutually. MCU can enable, turn off and set these two functions respectively through operation commands. The two-wire serial interface of CH450 is realized by hardware, and MCU can frequently carry out high-speed operation through the serial interface, without reducing the working efficiency of CH450.

5.2. Display Driver

CH450 uses dynamic scanning driver for LED nixie tubes and LEDs. The order is DIG2 to DIG7. When one pin sinks the current, the other pins do not sink the current. CH450 has internal current driver, which can directly drive 0.5-inch to 1-inch common cathode LED nixie tube. The segment drive pins SEG6-SEG0 correspond to the segments G-A, the segment drive pin SEG7 corresponds to the decimal point of the LED nixie tube, and the word drive pins DIG7-DIG2 are respectively connected to the cathodes of 6 LED nixie tubes. CH450 can also be connected to an 8×6 matrix LED array or 48 independent LEDs, or connected to an external inverse phase driver to support a common anode LED nixie tube, or connected to a high-power tube to support a large-size LED nixie tube.

CH450 has six 8-bit data registers, which are used to store six word data, corresponding to 6 LED nixie tubes or 6 groups of LEDs driven by CH450, 8 LEDs in each group. The bits 7-0 of the word data in the data register correspond to the decimal points and segments G-A of LED nixie tubes respectively. For LED array, the data bit of each word data uniquely corresponds to an LED. When the data bit is 1, the segment of the corresponding LED nixie tube or LED will be on; when the data bit is 0, the segment of the corresponding LED nixie tube or LED will be off. For example, the bit 0 of the third data register is 1, so the segment A of the corresponding third LED nixie tube is on.

The following diagram shows the segment name of the LED nixie tube

5.3. Keyboard Scan

CH450 keyboard scan feature supports an 8×6 matrix 48-key keyboard. During keyboard scan, pins DIG7-DIG2 are used for the column scan output, and SEG7-SEG0 pins have internal pull-down resistors for the line scan input.

CH450 periodically inserts keyboard scan during the display driver scan. During keyboard scan, the pins DIG7-DIG2 output high level in sequence from DIG2 to DIG7, and the remaining pins output low level. The outputs of the pins SEG7-SEG0 are disabled. When no key is pressed, SEG7-SEG0 are pulled down to low level. When a key is pressed, for example, the key connecting DIG3 and SEG4 is pressed, SEG4 detects high level when DIG3 outputs high level. In order to avoid error code caused by key jitter or external interference, CH450 performs two scans. Only when the results of two keyboard scans are the same, the key will be confirmed to be valid. If CH450 detects a valid key, the key code will be recorded, and active low keyboard interrupt will be generated through INT# pin. At this time, MCU can read the key code through the serial interface. CH450 does not generate any keyboard interrupt until a new valid key is detected. CH450 does not support combination key, that is, two or more keys cannot be pressed at the same time; if multiple keys are pressed at the same time, the key with the smaller key code will take precedence.

The key code provided by CH450 is 7-bit, bits 2-0 are column scan codes, bits 5-3 are line scan codes, and bit 6 is status code (1 when the key is pressed, 0 when the key is released). For example, when the key connecting DIG3 and SEG4 is pressed, the key code is 1100011B or 63H. After the key is released, the key code is usually 0100011B or 23H (or other values, but certainly less than 40H), where the column scan code corresponding to DIG3 is 011B, and the line scan code corresponding to SEG4 is 100B. MCU can read the key code at any time, but it generally read the key code when CH450 detects a valid key and produces keyboard interrupt. At this time, the bit 6 of the key code is always 1. In addition, if you need to know when

the key is released, MCU can read the key code regularly by inquiry until the bit 6 of the key code is 0.

The following table shows 8×6 matrix key addresses between DIG7-DIG2 and SEG7-SEG0, which are also the sequence addresses of the segments for the LED nixie tube and LED arrays. As the key code is 7-bit, the bit 6 is always 1 when the key is pressed. When the key is pressed, the actual key code provided by CH450 is the key address in the table plus 40H, that is, the key code shall be 40H-7FH.

Addressing	DIG7	DIG6	DIG5	DIG4	DIG3	DIG2		
SEG0	07H	06H	05H	04H	03H	02H		
SEG1	0FH	0EH	0DH	0CH	0BH	0AH		
SEG2	17H	16H	15H	14H	13H	12H		
SEG3	1FH	1EH	1DH	1CH	1BH	1AH		
SEG4	27H	26H	25H	24H	23H	22H		
SEG5	2FH	2EH	2DH	2CH	2BH	2AH		
SEG6	37H	36H	35H	34H	33H	32H		
SEG7	3FH	3EH	3DH	3CH	3BH	3AH		

5.4. Additional Functions

CH450 can provide active high power on reset to MCU. The reset input pins of MCU, DSP and microprocessor can be directly connected to RSTH pin of CH450 as required. When CH450 is energized, RSTH pin outputs an active high reset pulse signal. The power on reset pulse signal of CH450 also acts on the internal circuit of CH450.

CH450 power on reset refers to the reset pulse generated during the power-on process (the process from the power-off state to the normal power supply state). In order to reduce the power interference caused by the high drive current of CH450, the printed circuit board (PCB) shall be designed to be close to CH450, and a set of power supply decoupling capacitors shall be connected in parallel between positive and negative power supplies, including at least one leaded multilayer ceramic capacitor or porcelain capacitor with capacity of not less than 0.1uF and one electrolytic capacitor with capacity of not less than 100uF.

5.5. Serial Interface

CH450 has a two-wire serial interface realized by hardware, including two main signal lines: serial data clock input line SCL, serial data input and output line SDA; and an auxiliary signal line: interrupt output line INT#. Wherein, SCL is the input signal line with a pull-up resistor and at high level by default; SDA is a semi-bidirectional signal line with a pull-up resistor and at high level by default; INT# is an open-drain output with a pull-up resistor. When the keyboard scan function is enabled, it acts as a keyboard interrupt output line and at high level by default.

SDA is used for serial data input and output. The high level represents bit data 1, and the low level represents bit data 0. The sequence of serial data input is that the high bit is at the front and the low bit is at the back.

SCL is used to provide a serial clock, CH450 inputs data from SDA on its rising edge and outputs data from SDA on its falling edge.

SDA falling edge occurring during the SCL high level period is defined as the start signal of the serial interface, and SDA rising edge occurring during the SCL high level period is defined as the stop signal of the serial interface. CH450 receives and analyzes the command only after detecting the start signal. Therefore, when I/O pin resources of MCU are short, SCL pin can be shared with other interface circuits while SDA pin state is unchanged. Both SCL and SDA pins can be shared with other interface circuits if it is possible to ensure that SDA pin changes only when SCL pin is at low level.

INT# is used for keyboard interrupt output and is at high level by default. INT# outputs active low keyboard interrupt when CH450 detects a valid key; after MCU is interrupted, it performs a read operation to CH450, and CH450 recovers the INT# to high level and outputs the key code from SDA. MCU gets a byte of data from SDA, among which the lower 7 bits are the key code.

The communication process between MCU and CH450 is always divided into six steps. According to the operation direction of MCU, it is divided into two types: write operation for output data and read operation for input data. For the specific process, please refer to Example Program.

Write operation consists of six steps: output start signal, output byte 1, response 1, output byte 2, response 2 and output stop signal. Among them, the start signal and the stop signal are as mentioned above, response 1 and response 2 are always fixed to 1, output byte 1 and output byte 2 respectively contain 8 data bits, namely, one byte of data.

Read operation consists of six steps: output start signal, output byte 1, response 1, output byte 2, response 2 and output stop signal. Among them, the start signal and the stop signal are as mentioned above, response 1 and response 2 are always fixed to 1, output byte 1 and output byte 2 respectively contain 8 data bits, namely, one byte of data.

The following figure shows an example of write operation. The byte 1 is 01001000B, namely, 48H; the byte 2 is 00000001B, namely, 01H.

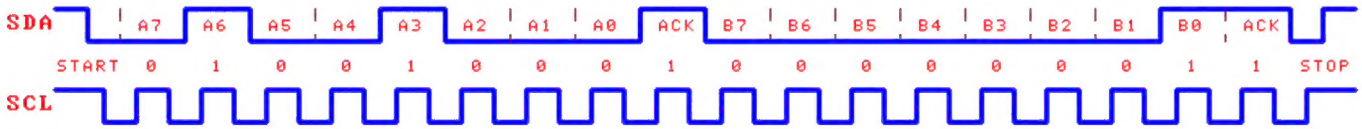

6. Operation Commands

The operation commands of CH450 are divided into three groups. Start signal, stop signal, response 1 and response 2 are the same for each command, except that the data of output bytes 1 and byte 2 are different and that byte 2 is transmitted in different direction.

6.1. Setting of System Parameter Commands

The output byte 1 of this command is 01001000B, namely 48H; the output byte 2 is [SLEEP][INTENS]000[KEYB][DISP]B.

"Set System Parameter Commands" is used to set system-level parameters of CH450: display driver enabling DISP, keyboard scanning enabling KEYB, display driver brightness control INTENS, low-power SLEEP control SLEEP.

The output is allowed to be displayed when DISP bit is 1, and the display driver is closed when DISP bit is 0.

The keyboard scan is enabled when KEYB bit is 1, and the keyboard scan is closed when KEYB bit is 0.

INTENS is used to control the brightness of the display driver, which contains two-bit data and has 4 combinations: data 00B, 01B and 10B respectively set the duty cycle of the display driver to 4/4, 1/4 and 2/4, and enable the internal segment drive current limiter. Data 11B sets the display drive duty cycle to 4/4, but the internal segment drive current limiter is disabled, so the external segment pin is required to be connected with the current limit resistor R0 in series.

SLEEP is used to put CH450 into a low-power sleep state, so as to save power. CH450 in low-power sleep state can be woken up by any of the following two events. The first event is the detection of keys on SEG3-SEG0, and the valid key code is 42H to 5FH; the second event is the detection of the button on SEG3 ~ SEG0; the second event is the reception of next operation command sent by MCU. When CH450 is waken up, SLEEP bit is automatically reset to 0. Sleep and Wake Up operations do not affect other working states of CH450. If KEYB bit is 1, key interrupt will occur after waking up; if KEYB bit is 0, key interrupt will not occur after waking up.

This command does not affect the data in the internal data buffer.

6.2. Load Word Data Command

The output byte 1 of the command is address 64H, 66H, 68H, 6AH, 6CH or 6EH, respectively corresponding to the 6 LED nixie tubes driven by pins DIG2-DIG7; the output byte 2 is [DIG_DATA]B, namely, the value between 00H and 0FFH, which is 8-bit word data.

"Load Word Data Command" is used to write the word data DIG_DATA to the data register at the address specified in byte 1. For example, command data 01100100B (namely, 64H corresponds to DIG2) and 01111001B mean that word data 79H is written into the first data register so that the LED nixie tube driven by the pin DIG2 will display E.

The data in CH450 internal data register is uncertain after power on reset, so the data in the data register shall be cleared or the data to be displayed shall be directly loaded before the display is started. The reset process does not affect the data in the data register.

6.3. Read Key Code Commands

The output byte 1 of this command is 01001111B, namely, 4FH; the lower 7 bits of the input byte 2 are the key code.

"Read Key Code Commands" is used to get the code for the valid key that CH450 recently detects. The command is read operation, only command with data return. MCU must first release SDA pin (three-state output is disabled or pulled up to the high level), and then CH450 outputs the key code from SDA pin, the valid data of the key code is bit 6-0 data, the bit 6 is a status code, the bits 5-0 are scan codes and key addresses.

7. Parameters

7.1. Absolute Maximum Value

Critical value or exceeding the absolute maximum value may cause the chip to work abnormally or even be damaged.

Name	Parameter description	Min.	Max.	Unit
TA	Ambient temperature during operation	-40	85	℃
TS	Ambient temperature during storage	-55	125	℃
VCC	Supply voltage (VCC connects to power, GND to ground)	-0.5	6.0	V
VIO	Voltage on the input or output pins	-0.5	VCC+0.5	V
IMdig	Continuous drive current of single DIG pin	0	120	mA
IMseg	Continuous drive current of single SEG pin	0	25	mA
IMall	Total continuous drive current of all SEG pins	0	130	mA

7.2. Electrical Parameters

Test Conditions: TA=25℃, VCC=5V

Name	Parameter description	Min.	Typ.	Max.	Unit
VCC	Supply voltage	3	5	5.5	V
ICC	Current of power supply	0.2	80	150	mA
ICCs5	Static current at 5V (all input pins are at high level)		0.4	1	mA
ICCs3	Static current at 3.3V (all input pins are at high level)		0.1	0.3	mA
VIL	Low level input voltage of SCL and SDA pins	-0.5		0.8	V
VIH	High level input voltage of SCL and SDA pins	2.0		VCC+0.5	V
VILseg	Low level input voltage of SEG pin	-0.5		0.5	V
VIHseg	High level input voltage of SEG pin	1.8		VCC+0.5	V
VOLdig	Low level output voltage of DIG pin (-80mA)			0.8	V

VOHdig	High level output voltage of DIG pin (8mA)	4.5			V
VOLseg	Low level output voltage of SEG pin (-18mA)			0.5	V
VOHseg	High level output voltage of SEG pin (15mA)	4.5			V
VOL	Low level output voltage of other pins (-4mA)			0.5	V
VOH	High level output voltage of other pins (4mA)	4.5			V
IDN1	Input pull-down current of SEG pin		-50		uA
IUP1	Input pull-up current of SCL pin		100	300	uA
IUP2	Input pull-up current of SDA pin		250	400	uA
IUP3	Output pull-up current of INT# pin		500	5000	uA
VR	Default voltage threshold of power on reset	2.3	2.6	2.9	V

7.3. Internal Timing Parameters

Test Conditions: TA=25°C, VCC=5V

(Note: The timing parameters in this table are multiples of the built-in clock periods, and the frequency of the built-in clock decreases with the decrease of the supply voltage)

Name	Parameter description	Min.	Typ.	Max.	Unit
TPR	Reset time generated during power on detection	6	20	50	mS
TDP	Display scan period		8		mS
TKS	Key response time (two keyboard scans)	20	50		mS

7.4. Interface Sequence Parameters

Test Conditions: TA=25°C, VCC=5V, Refer to the Attached Drawing

(Note: The unit of measurement in this table is nanosecond, namely, 10^{-9} seconds. If the maximum value is not indicated, the theoretical value can be infinite.)

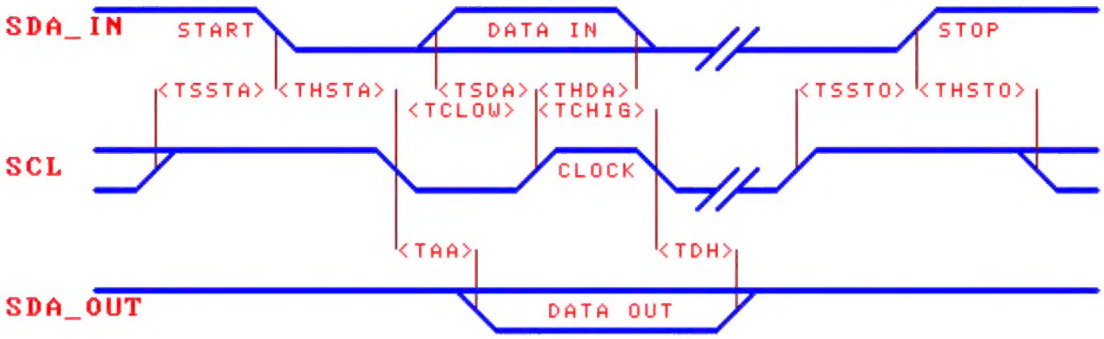

Name	Parameter description	Min.	Typ.	Max.	Unit
TSSTA	Setup time of SDA falling edge start signal	100			nS
THSTA	Hold time of SDA falling edge start signal	100			nS
TSSTO	Setup time of SDA rising edge stop signal	100			nS
THSTO	Hold time of SDA rising edge stop signal	100			nS
TCLOW	Low level width of SCL clock signal	100			nS
TCHIG	High level width of SCL clock signal	100			nS
TSDA	Setup time of SDA input data to SCL rising edge	30			nS
THDA	Hold time of SDA input data to SCL rising edge	10			nS
TAA	Delay SDA output data to SCL falling edge	2		30	nS

TDH	Delay of invalid SDA output data to SCL falling edge	2		40	nS
Rate	Average data transmission rate	0		2M	bps

8. Application

8.1. LED Nixie Tube Display Driver (Figure below)

CH450 is connected to the external MCU through two-wire serial interfaces SCL and SDA. Capacitors C1 and C2 are arranged near the power pins of CH450 to decouple the power supply and reduce the interference caused by high drive current.

CH450 can drive 6 common cathode LED nixie tubes directly and dynamically. After the pins on the same segments of all LED nixie tubes are connected in parallel (segments A-G and decimal point), they are connected with the segment drive pins SEG0-SEG7 of CH450 through a series current limiting resistor R0. The common cathodes of the LED nixie tube are driven by the pins DIG2-DIG7 of CH450 respectively.

The resistor R0 connected with the segment pins in series is used to limit and balance the segment drive current. At the supply voltage of 5V, the series resistance 200Ω often corresponds to the segment current 13mA. CH450 can internally limit the segment drive current, so R0 can be eliminated.

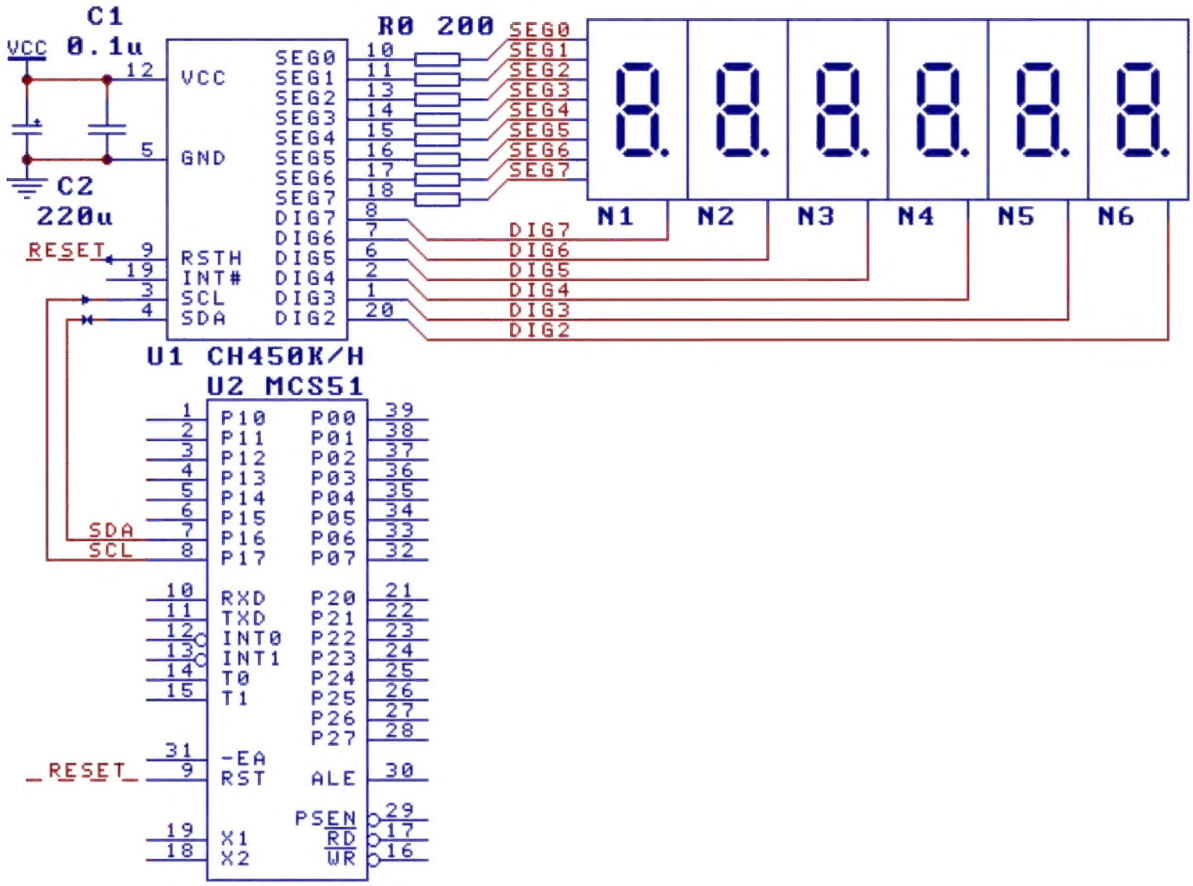

8.2. LED Nixie Tube Driver and Keyboard Scan (Figure below)

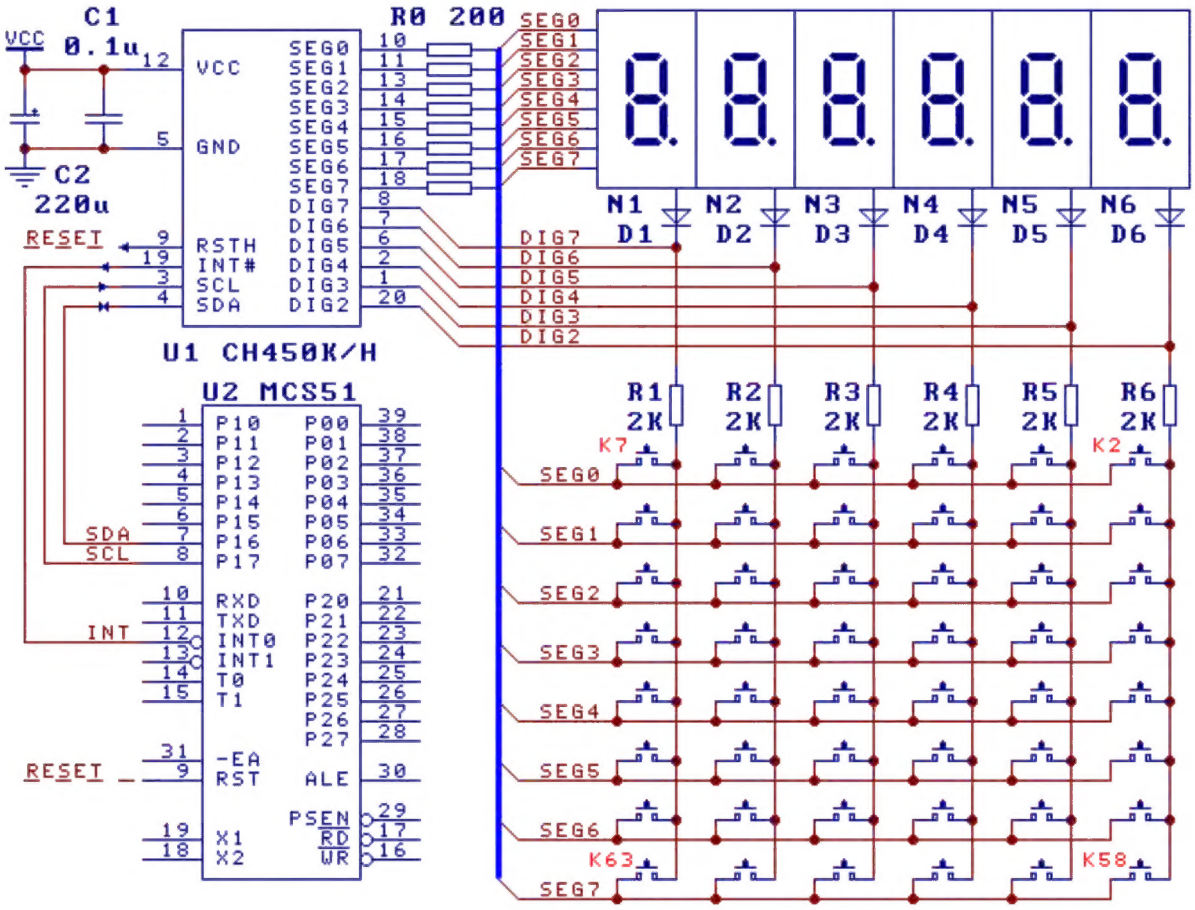

CH450 has a 48-key keyboard scan function. If only a few keys are needed in the application, any unused keys can be removed from 8×6 matrix. In order to prevent short circuit from being formed between SEG signal line and DIG signal line to impact display after the key is pressed, current limiting resistors R1-R6 shall be connected in series between CH450 DIG2-DIG7 and the keyboard matrix, and their resistance can be 1-10KΩ. When the keyboard function is used, INT# pin of CH450 can be connected to the interrupt input pin of MCU. If it is connected to the ordinary I/O pin, then the query mode shall be used to determine whether CH450 has detected a valid key.

In the figure, MCU U2 drives 6 common cathode LED nixie tubes through CH450 and scans 48 keys simultaneously. Due to the reverse leakage of some LED nixie tubes at high working voltage, it is easy to for CH450 to mistake that a key has been pressed down, so it is recommended to use LEDs D1-D6 to prevent the reverse leakage of LED nixie tubes, and to improve the level of input signals SEG0-SEG7 during keyboard scan to ensure more reliable keyboard scan. When the supply voltage is low (e.g. VCC=3.3V), these LEDs shall be removed to avoid affecting the display brightness.

8.3. Drive Common Anode LED Nixie Tube (Figure below)

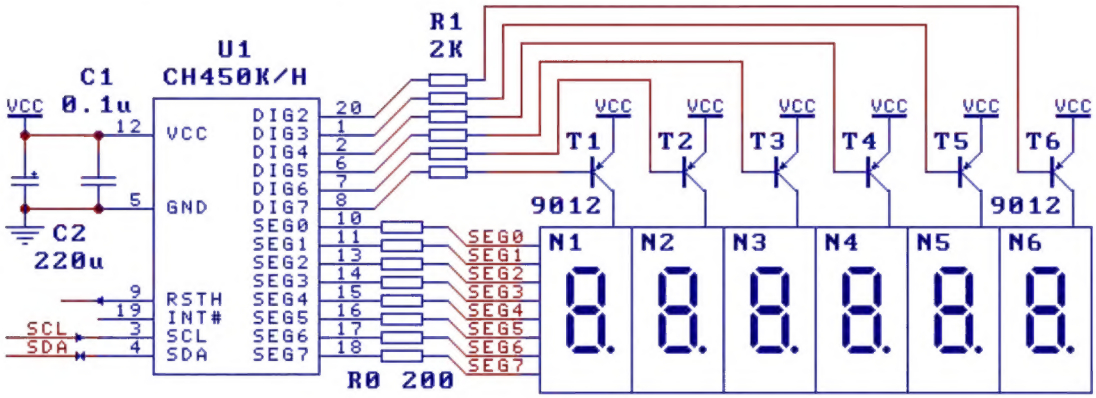

After an inverter is added to the pins DIG2-DIG7, CH450 can drive the common anode LED nixie tube. In the figure, 6 PNP triodes T1-T6 (with model of 9012 or 8550, etc.) and 6 resistors R1 (with resistance of 300Ω-3KΩ) constitute 6 groups of inverters, respectively drive 6 common anode LED nixie tubes. As the SEG segment pin of CH450 in the common anode connection is inversely driven, the word data in "Load Word Data Command" shall be reversed by bit; if the data bit is 0, it will be on; if the data bit is 1, it will be off.

If a large size high voltage LED nixie tube is required to be driven or the drive current is required to be increased to increase the brightness, refer to the methods in the data manual for CH452 chip.

8.4. Anti-interference (Important)

As CH450 drives the LED nixie tube or LED has high current, high glitch voltage will be generated on the power supply. Therefore, if the PCB wiring of the power line or ground wire is not reasonable, it may affect the stability of MCU or CH450. Solutions to power interference:

① It is recommended to use shorter and thicker power line and ground wire, especially when CH450 and MCU are arranged on two PCBs;

② The power supply decoupling capacitor is connected in parallel close to the CH450 between the positive and negative power supplies, at least one 0.1uF leaded multilayer ceramic capacitor or ceramic capacitor and one electrolytic capacitor with a capacity of not less than 100uF.

For external interference when the signal line is long, refer to the following figure for solution:

① At the pin end close to CH450 on the signal line, add the capacitors C3 and C4 with the capacitance of 47pF to 470pF. If the capacitance is higher, the transmission speed of the communication interface for MCU will be lower.

② Optionally add the resistors R3 and R4 with resistance of 100-470Ω;

③ Reduce the transmission speed between MCU and CH450 (because of increased resistance and capacitance);

④ If it is driven by a quasi-bidirectional I/O pin (such as standard MCS51 MCU), it will be suggested to add resistors R1 and R2 with resistance of 500Ω to 10KΩ to strengthen the pull-up capacity of the quasi-bidirectional I/O pin for MCS-51 MCU, so as to keep good digital signal waveform during long distance transmission; pull-up resistors R1 and R2 are not required for short signal lines, and pull-up resistors R1 and R2 are not required for bidirectional I/O pins driven by totem pole.

In addition, for the application environment with strong interference, MCU can refresh CH450 every a few seconds, including reloading the data register of each LED nixie tube and restarting the display.

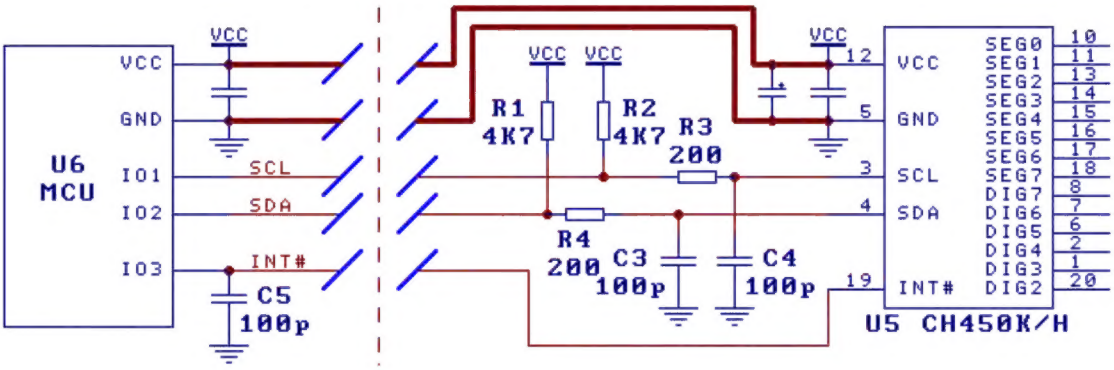

8.5. Interface Program of MCU

The website provides part of C language and ASM assembly interface program for MCU.